Tracewell Systems

Data Sheet

567 Enterprise Drive Westerville, OH 43081 1.800.848.4525 phone 614.846.6175 fax 614.846.2903 www.tracewellsystems.com

T-Frame for VME64x

8-Slot VME64x Test and Development System

Description

Tracewell Systems offers the ideal test and development platform for industrial, military, data and telecommunication real-time VME applications. T-Frame for VME64x is compatible with any VME board generation, VME32, 64, and 64-bit extension all in one chassis making it the perfect tool weather the requirement is a new VME64x development or an upgrade. Lightweight, rugged construction makes the T-Frame easy to use and move from job to job. The unique open-access platform and imbedded monitoring make it right for board, software and system-level development as well as production test and debug.

T-Frame's patented open-frame design eliminates the need for performance robbing extender cards by providing unrestricted access to installed boards. T-Frame includes comprehensive monitoring of all backplane voltages, current and exhaust air temperature. A front panel interface displays these monitor outputs and includes temperature, fan speed, and voltage control, including +5 and +3.3 volt margining. The 64-bit 8-slot backplane includes 133 pin P0 feed-thru connectors in all slots for extended I/O. Two power options include single or dual 400 watt plugging power supplies, allowing hot swap power simulation, N+1, or 700 watt operation. Power supplies may be installed in either the front or rear cardcage, further improving accessibility. Fans are adjustable for full or half speed and automatically turn off when not in use to reduce noise. The T-Frame's steel and aluminum construction make it rugged yet easily portable. Tracewell's rigid steel cardcage eliminates the flex common to conventional extruded rail designs and is fully IEEE 1101.10/11 compliant. The rear I/O cardcage is adjustable for a wide range of board depths. Other conveniences include a tilt base, removable side access covers, recessed carrying handles, and internal 3.5" peripheral bay.

T-Frame for VME64x reduces design cycles by providing the user unmatched accessibility.

T-Frame™ US Patent 5,416,427

Features

- **Patented open-frame design eliminates extender boards**
- **Built-in voltage, current and temperature monitoring**
- **Easy front panel controls for margining +5 and +3.3 volts**
- **160 pin J1/J2 and 133 pin 2mm J0 for additional I/O**
- **Dual-switches allow testing of both link ports**
- **400 watt, N+1, or 700 watt operation**
- **Plugging power supplies with PFC and hot-swap**
- **IEEE 1101.10/11 compliant steel subracks eliminate flex**
- **Convenient tilt base and removable side panels**
- **Adjustable rear cardcage for 60, 80, and 100mm boards**

MEMBER VITA Open Standards, Open Markets

ISO 9001:2000

567 Enterprise Drive Westerville, OH 43081 1.800.848.4525 phone 614.846.6175 fax 614.846.2903 www.tracewellsystems.com

Physical

Construction: Aluminum sheet,5052-H32 alloy; major components: sides (0.250”), top and bottom covers (0.062”), base (0.188”) Steel sheet, ASTM A366; major components: front and rear cardcages (0.060”) Aluminum Extrusion, 6101-T6 alloy; cardcage front profile

Plastics: Cardguide, snap-in, 0.062" pcb, white nylon, UL94V-0 material Cardguide entry, snap-in, 0.062" pcb, neutral nylon, UL94V-0 flame rated material Adjustment knobs, black polycarbonate, UL94HB flame rated material; Tinted view windows, gray polycarbonate, UL94HB material

Cardcage: ***Front:*** 6U x 160mm, 8-slots, IEEE 1101.10; ***Rear:*** 6U x 80mm, 8-slots, IEEE 1101.11, adjustable for 60, 80, and 100mm boards

Dimensions: 15.6"D (396mm) 14.4"W (365mm) 16.8"H (428mm)

Weight: 34 lbs. (15.5 kg) with one power supply (PS1); 37.5 lbs. (17.1 kg) with two power supplies (PS2)

Finish: Textured paint, light gray per Sherwin Williams F63TXA0819; all exterior surfaces. All other aluminum is brushed gold chromate per MIL-STD-5541, steel is bright zinc plate

Accessories: Hardware kit provided which includes (8) +5.0V (brilliant blue) and +3.3V (cadmium yellow) backplane I/O keys, (2) I/O jumpers, and (1) drive power harness; (4) removable side panels provided

Backplane

Bus Structure: VME64x, 32/64 bit J1/J2 monolithic

Connectors: 160 pin, 5 row, J1/J2. IEC 61076-4-113 133 pin, 7 row, J0, IEC 61076-4-101

Assembly: SMT/press-fit assembly

Control: System header for SYSRESET, SYSFAIL, ACFAIL, +5 and return; 5 pin MTA-1000

PCB: 10 layers, FR4 epoxy-glass laminate, multilayer, all- stripline, SMOBC, silkscreen on two sides, 1oz copper signal and power planes minimum, UL94V-0, 0.154” (3.9mm) thickness

Impedance: 50 Ohms, non-loaded pcb

Termination: Active, electronically outboard, mechanically inboard; Thevenin equivalent to 194 Ohms at 2.94V

Decoupling: High-frequency decoupling at each slot; 0.1uF MCL ceramics (SMT) Low-Frequency decouplingdistributed across backplane; 100uFTantalum (SMT)

Rear Shrouds: Extended tails and shrouds on all J2 and J0 slots

DC Distribution: Screw terminals for +5, +3.3, return (35A rating per terminal), 20 position ATX for +5, +3.3, +/-12Vdc (12A rating per terminal)

Compliance: ANSI/VITA 1-1997

Power†

Option Code PS1: T-Frame equipped with a single 400W 6U DIN power supply

Option Code PS2: T-Frame equipped with dual 400W 6U DIN power supplies

Total Output: 400W (PS1), 700W (PS2); maximum for all outputs combined

Operation: Single power supply may be hot-plugged without effecting normal system operation (PS2)

Input: 90 – 264VAC, universal input

Frequency: 47 – 63 Hz

Efficiency: 70% typical (65% min. at 90VAC)

Power Factor: 0.99 typical

Input Current: 6A maximum (per power supply)

Inrush Current: 30A/115VAC, 60A/264VAC; max <4 msec

Hold-up: 20ms minimum

DC Outputs: +5.0V/50A, +3.3V/40A, +12V/12A, -12V/4A (per PS)

Output Adjust: +/-10% nominal on +5 and +3.3V only

Ripple/Noise: 50mV maximum, all outputs

Remote Sense: All outputs, 500mV maximum compensation

Cooling: 15cfm/400lfm minimum airflow required through power supply fins; airflow provided by cardcage

Accessibility: DIN power supplies install in cardcage in any two of three power slots; (2) front, (1) rear

Cooling††

Airflow: Bottom intake, top exhaust, pressurized; boards and power supplies are cooled independently

Fans: (3) 130cfm, high pressure tube-axial, 12VDC, one positioned below 8-slot front cardcage, one below front power slots, and below front power slots and below rear power slot; (1) 93cfm, tube-axial, 12VDC, also evacuates air above front power slots

Adjustment: All fans adjustable for 50% or full speed operation; front panel switch control cPCI cardcage fan, power supply fan speeds are controlled by switch (SW2) on the power backplane

Peripheral Support: (1) 3.5” x 1” device

Power Harness: (1) 4-pin IDC, AMP 1-480424-) or equivalent; (1) 4-pin IE (mini), AMP 171822-4 or equivalent

Cooling: Convection

Accessibility: Rear removable tray, tool accessible

Control and Input

Swithches: ***Front Panel:*** margin control for +5, +3.3VDC, voltage select (rotary); Voltage/°C, fan speed control (pushbutton, latching); reset control (pushbutton, momentary) ***Rear panel:*** power supply disable/ inhibit control (SW1), power supply fan speed (50% or full; SW2), AC power switch (rocker), AC circuit breaker (pushbutton, latching)

Power Input: Rear panel AC inlet (IEC320), detachable line cord provided

Circuit Protection: Rear panel single pole mannetic circuit breaker, 12A (pushbutton, latching)

Monitoring

Interface: Two front panel LCD numeric displays and LED indicators

Interface: Backplane DC voltage and current measurement for +5, +3.3, +/-12VDC (front panel, user selectable); Exhaust air temperature over front card slots (°C, user selectable, rear access slide probe); Margin control provides +/-10% adjustment of +5 and +3.3VDC (front panel, user selectable); Backplane reset control and indicator (referenced to backplane BRST*); Power-on LED indicator (referenced to +5VDC)

Outputs: DC voltage/current output displayed on (2) front panel green LCDs; Exhaust air temperature display on the Voltage LCD when Voltage/°C switch is depressed; Power-on LED indicator illuminates green when power supply +5VDC present; Margin controlled voltages display on Voltage LCD when Voltage selector is set to +5 or +3.3VDC; Reset LED illuminates red when backplane reset (BRST*) is asserted

Tolerance: DC voltage within 1%; current measurement within 3%; temperature within 3°C (Tolerances assume a 20-minute warmup period for system and installed components)

Environmental

Temperature: 0–50°C operating with specified airflow; -20–70°C non-operating

Shock/Vibe: Basic transportation per ASTM 0775

Humidity: 5 – 95% non-condensing at 40°C operating, 0 – 95% non-operating

Acoustic <55 dBa maximum, measured from 1 meter from all surfaces

Agency Compliance†††

Safety/Emission: Available for power supply only, consult factory

Warranty

1 year limited warranty

567 Enterprise Drive Westerville, OH 43081 1.800.848.4525 phone 614.846.6175 fax 614.846.2903 www.tracewellsystems.com

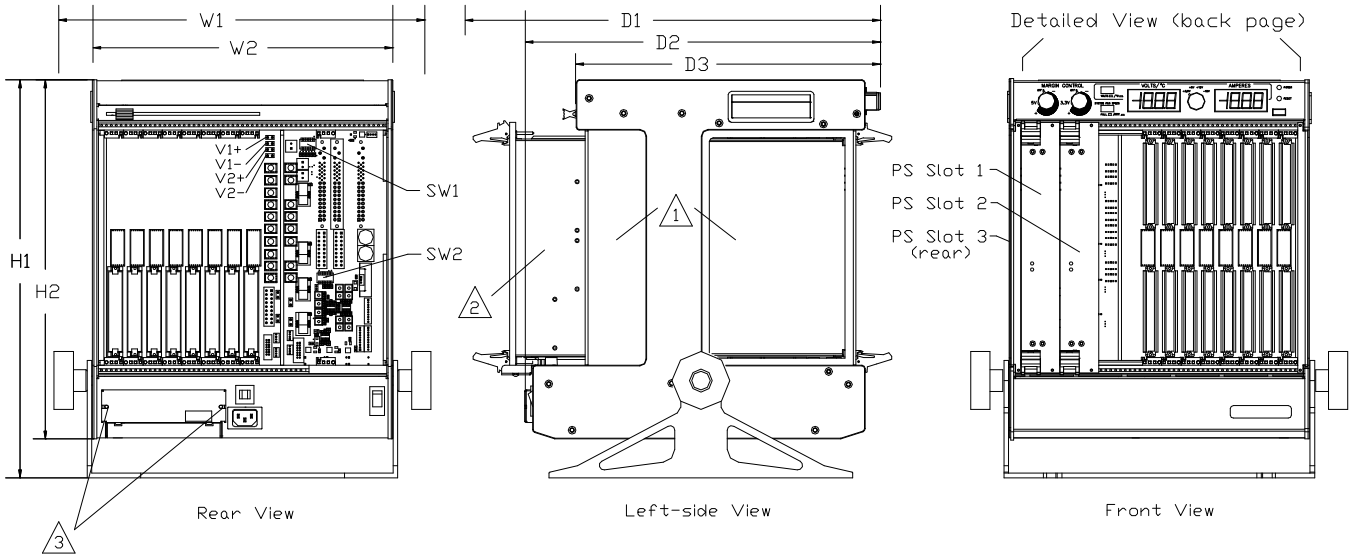

POWER SUPPLY CONFIGURATION

SW1

PS Slot 1	1	ON	Enabled
	2	ON	
PS Slot 2	3	ON	Enabled
	4	ON	
PS Slot 3	5	ON	Enabled
	6	ON	

(Default Shown)

POWER SUPPLY FAN SPEED

SW2

Reserved	1	ON	
	2	ON	
	3	ON	
	4	ON	
PS Slot 1, 2	5	ON	Full
PS Slot 3	6	ON	

OFF = 50% ON = Full
(Default Shown)

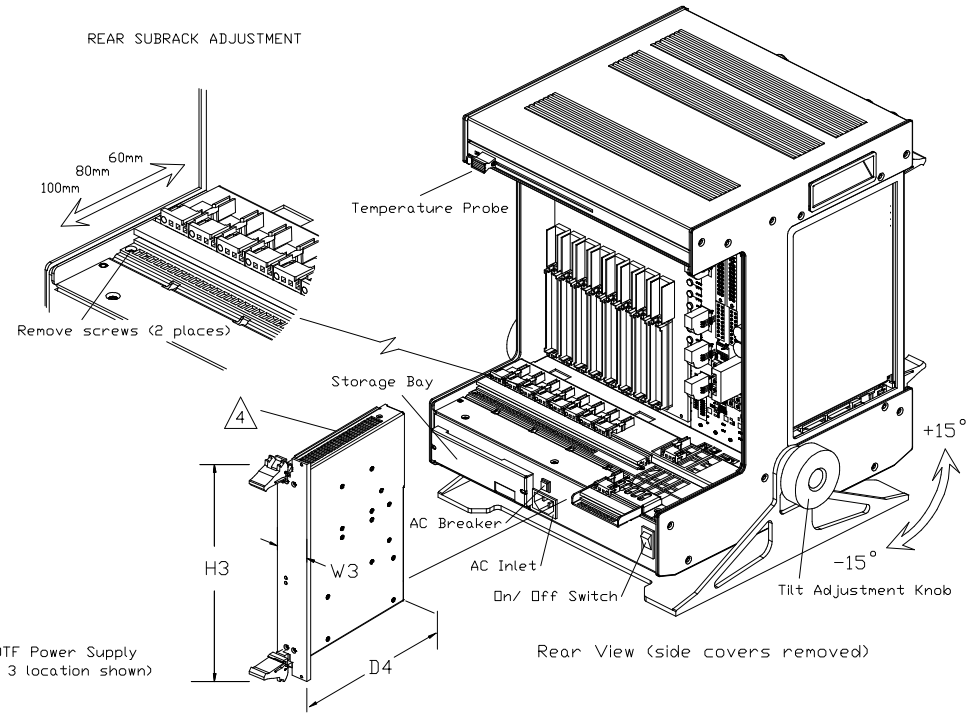

Dimensions:

D1: 17.10” (435 mm)	W1: 15.08” (383 mm)	H1: 16.37” (416 mm)
D2: 14.62” (371 mm)	W2: 12.34” (313 mm)	H2: 14.77” (375 mm)
D3: 12.55” (319 mm)	W3: 1.60” (41 mm)	H3: 10.31” (262 mm)
D4: 6.77” (172 mm)		

Notes

1. Removable side covers installed (4 places)
2. Power supply shown in PS Slot 3 position
3. Storage bay removes with 2 screws
4. CAUTION!! Supplies carry hazardous voltage

567 Enterprise Drive Westerville, OH 43081 1.800.848.4525 phone 614.846.6175 fax 614.846.2903 www.tracewellsystems.com

Detailed View of Front Panel

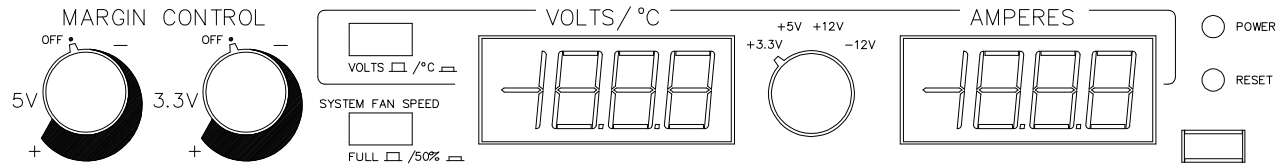

Ordering Information

The T-Frame™ for VME64x includes chassis, backplane, power supply, storage bay, monitoring, and is available in the following standard configurations:

Part Number:	**Description:**
580-6021-F00-00	T-Frame for VME64x, 6U, 8-SL, 1-400W (PS1)
580-6022-F00-00	T-Frame for VME64x, 6U, 8-SL, 2-400W (PS2)

Accessories:

014-6001-001-0P	Shielded single-slot filler panel, 6U X 4T; installs in vacant slots
106-1001-099-01	Non-shielded single-slot filler panel, 6U X 4T; installs in vacant slots
110-1171-099-01	Subrack air block, single slot; snaps into a vacant slot to block airflow
050-1158-000-PS	P/S,SP,400W,6U power supply

Notes:

† This product is designed for operation only with Tracewell Power PCI350 power supplies. Operation is limited to a maximum of two supplies, totaling 700 watts.

†† IMPORTANT: all fans must be operated in full speed setting for output power levels greater than 100 watts

††† As an option, Tracewell Systems can provide agency test and certification of the customer's specific integrated product. Consult factory for more details

request a quote at our web site:
www.tracewellsystems.com
or call: 1.800.848.4525

© Copyright Tracewell Systems, Inc. 2010

Tracewell Systems, Inc. reserves the right to make changes without notice.
All brand or product names may by trademarks or registered trademarks of their respective holders.
Please consult Tracewell Systems for any special or custom requirements.

P/N 095-6017_101015